DO NOT SCALE
IF IN DOUBT, ASK

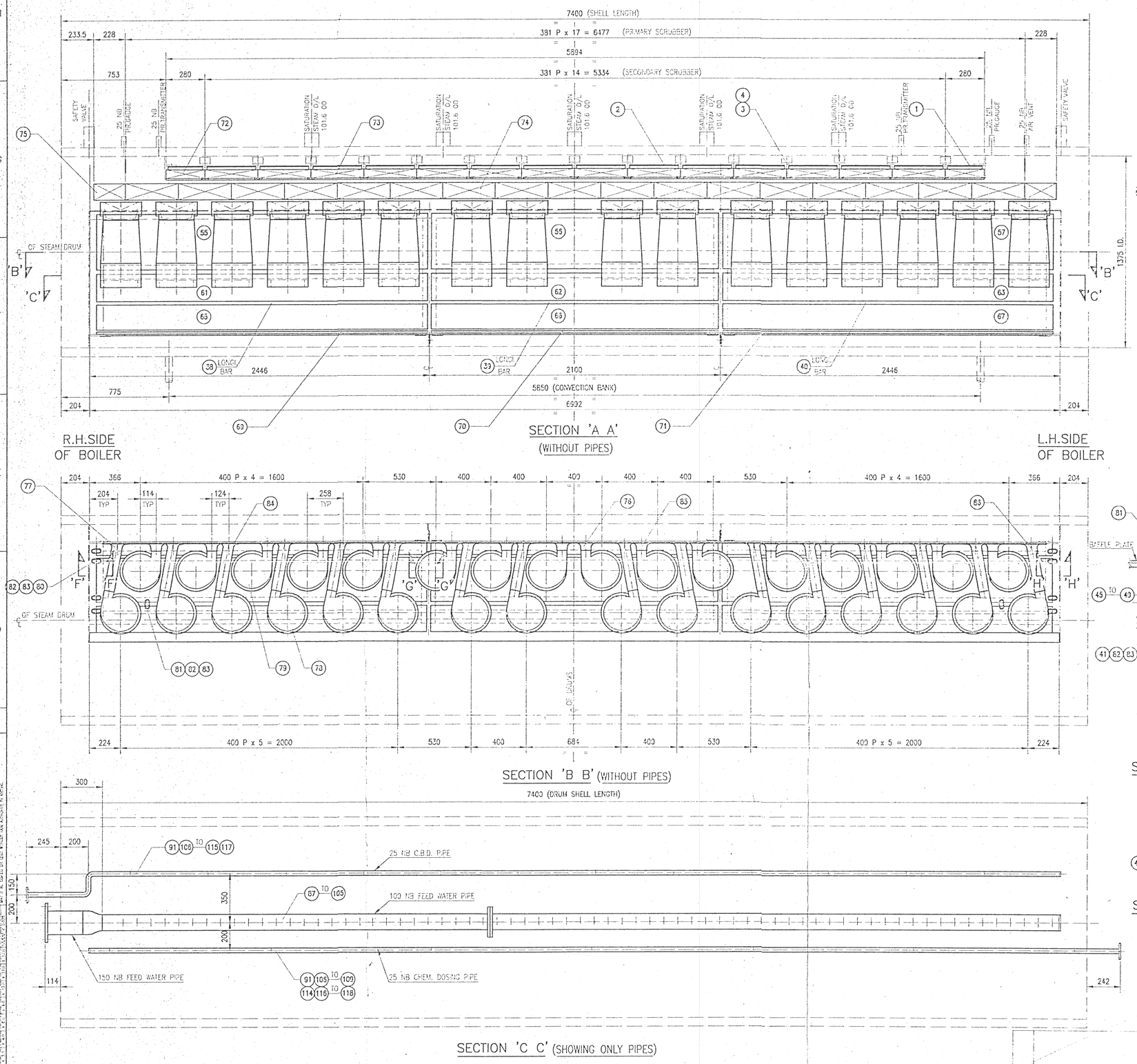

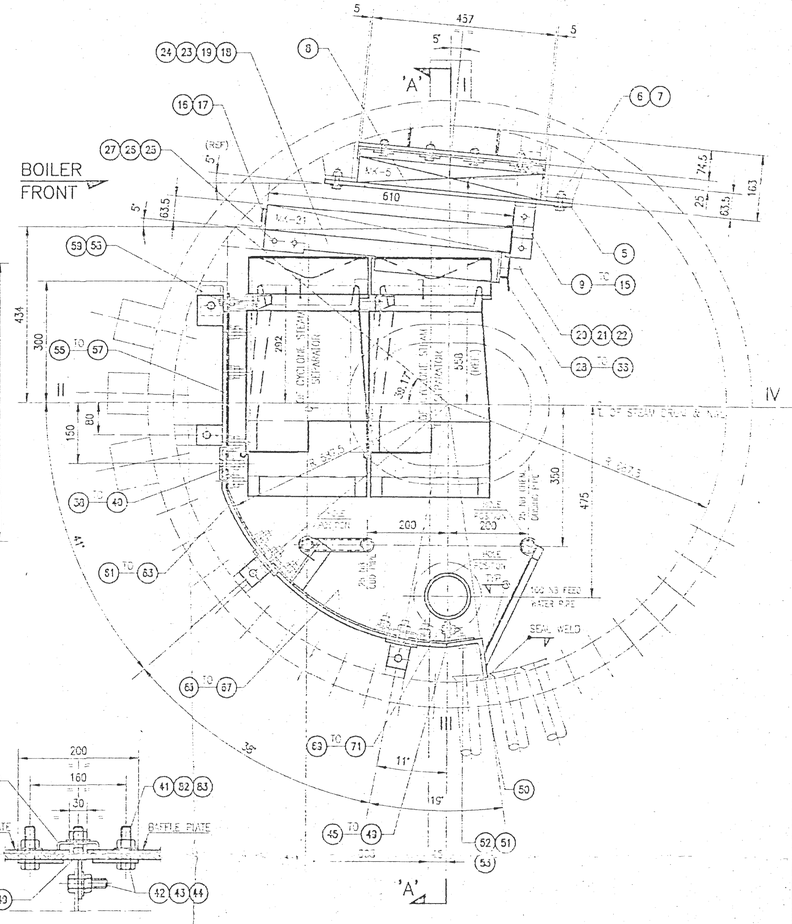

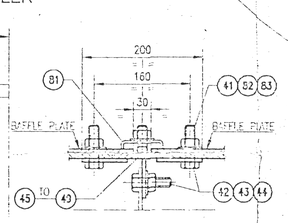

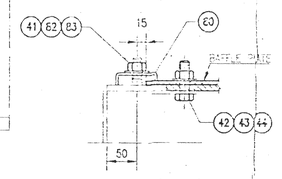

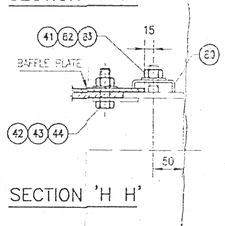

NOTES

1) ALL DIMENSIONS ARE IN mm. UNLESS OTHERWISE SPECIFIED.
2) STEAM PURIFIER ASSY. SHOULD BE FITTED IN STEAM DRUM PRIOR TO DESPATCH.
3) HOLES POSITION OF FEED WATER PIPE, C.B.D. PIPE AND CHEMICAL DOSING PIPE SHOULD BE STRICTLY MAINTAINED AS SHOWN.
4) ALL INTERNALS TO BE COATED WITH MINERAL OIL.
5) FILLET WELD SIZE 6 mm. WHEREVER NOT SPECIFIED.
6) INDICATES SITE WELD.
7) ALL GAPS SHALL BE SEAL WELDED AT SITE.

REFER FOLLOWING DRGS.

a) STEAM PURIFIER DETAILS ——— P21-1FB-15091
b) STEAM PURIFIER PIPE DETAILS ——— P21-2FB-15365
c) INTERNAL ATTACHMENTS FOR STEAM DRUM ——— P21-1FB-15092
c) EXTERNAL ATTACHMENTS FOR STEAM DRUM ——— P21-2FB-15384

CLIENT.:- M/S OSWAL STEELS , ORISSA

THIS SYMBOL IN THE BLOCK INDICATES THAT THIS BLOCK IS PICKED FROM BLOCK LIBRARY.

REVISION IN CAD DRAWING SHALL BE RELEASED ONLY AFTER ENSURING THAT IT IS INCORPORATED IN THE RELEVENT CAD FILE. REVISION IS INVALID IF CAD CHK. SIGN IN REV. IS ABSENT

BOILER NO. WA017100 WA017200

Thermax Babcock & Wilcox Limited PUNE 411 034

REF.NO.

SCALE 1 :15 | DRAWN | CHECKED | APPROVED

STEAM PURIFIER ASSEMBLY
(FOR 1375 I.D. DRUM)

DRG.NO. P21-1FB-15090 | REV.NO. 0

REV. NO. | REVISION | MADE BY DATE | CAD CHK DATE | APP.BY DATE

THIS IS A CAD DRAWING , DO NOT TAKE REPRODUCIBLE